BELLCOMM, INC.
955 L'ENFANT PLAZA NORTH, S.W. WASHINGTON, D. C. 20024

B70 07044

SUBJECT: Skylab ATM Telemetry, ASAP and ATMDC -- How They Work Together - Case 610

DATE: July 15, 1970

FROM: D. A. De Graaf

ABSTRACT

The Skylab ATM telemetry system is used to relay a variety of data to earth, including ATM experiment data, systems monitoring data, and ATM computer data. A fraction of the real-time data stream is saved on tape by the ASAP system for later playback.

This memorandum is a digest of certain system characteristics, culled from reference documents and private conversations, and describes how these systems work together. Computer telemetry is described in some detail, with word lists and repetition patterns defined.

The computer telemetry procedure now planned has the defect that it is impossible to associate data with certainty to a specific computation cycle. This problem was discussed with Bill Chubb of MSFC and John Copeland of IBM and is under review. Two possible solutions are suggested here.

(NASA-CR-113359) SKYLAB ATM TELEMETRY, ASAP AND ATMDC - HOW THEY WORK TOGETHER (Bellcomm, Inc.) 16 p

N79-72270

Unclas
00/17 11852

FF No. 602(A)
[redacted] (THRU)
16 None
(PAGES) (CODE)
CR-113359
[redacted] RY)
AVAILABLE TO NASA [redacted]

SEP 70

BELLCOMM, INC.
955 L'ENFANT PLAZA NORTH, S.W. WASHINGTON, D. C. 20024

B70 07044

SUBJECT: Skylab ATM Telemetry, ASAP and ATMDC -- How They Work Together - Case 610

DATE: July 15, 1970

FROM: D. A. De Graaf

MEMORANDUM FOR FILE

Introduction

This is a summary, compiled from several sources,* of the ATM telemetry system and its data flow. In particular the data flow from the computer (ATMDC) is described as well as the Auxiliary Storage and Playback (ASAP) system. It is easiest to begin at the end and work our way forward. A block diagram of the telemetry system is shown in Figure 1.

Transmitter and Switching

Two VHF transmitters and antennas are available. Each can transmit a 72,000 bit/sec serial wave train. Flexible switching permits each transmitter to be driven from either of two sources: the real-time telemetry, or the ASAP playback. So it is possible to get old data from the tape recorder simultaneously with the real-time flow.

PCM/DDAS

The real-time telemetry bit stream is generated in the Pulse Code Modulation/Digital Data Acquisition Subsystem (PCM/DDAS), of which there are two, a primary and a redundant unit. This is the heart of the telemetry system, where an enormous variety of analog and digital inputs are sampled and converted to a single serial stream of bits. The output is organized as shown in Figure 2 into 10-bit words, 60 words per frame, and 30 frames per master frame. The entire master frame of 1800 words, as pictured, is transmitted in 1/4 sec. In each frame, words 28A, 28B, and 29A are reserved for multiplexer voltage level references, and words 29B, 30A, and 30B are reserved for frame sychronizing patterns, leaving only 54 out of 60 words actually available for data.

ASAP

The ASAP assembly includes a memory module, two tape recorders (primary and redundant), and control circuits. In the record mode all input data is derived from the PCM/DDAS bit

*References 1 and 2.

stream; no input data is fed directly from its source. The playback occurs at the same 72,000 bit/sec rate as real-time telemetry. The recording captures on the average only 1 word out of 18 words of the real-time stream. The tape recorder capacity is 90 minutes worth, which plays back, on command, in 5 minutes.

The Memory Module (MM) is a 400 word, 25 bit buffer between the real-time telemetry bit stream and the slower recording process. The first 15 bits, in a non-destructive readout section (NDRO), contain 400 addresses that refer to time slots in 4 consecutive PCM/DDAS master frames. The other 10 bits, in a destructive readout section (DRO), are pigeon-holes to store the designated data bits when they come up in the pulse train. The 400 addresses are listed in chronological order and the associated memory cells are loaded sequentially at a pseudo-random rate as the specified words occur. Concurrently, the memory cells are unloaded and delivered to the tape recorder in a rigidly synchronous flow.

By selecting only 400 words out of 4 master frames of 1800 words each, the required data selectivity of 1 in 18 is achieved. It appears that the 400 addresses will be distributed evenly, 100 words per master frame, and these may even be the same 100 words out of each master frame, but I have found no direct statement to this effect, nor does there appear to be any inherent restriction by the Memory Module on the distribution of the addresses.

Data is recorded on tape in the format of Figure 3, similar to the real-time format, except that 100 10-bit words constitute a frame, and 60 frames a master frame. As before, the end of frame is signalled by a special code in the last three words, leaving 97 useful data slots. This structure strongly suggests that each 100 word frame is extracted from one 1800 word master frame of the real-time stream each 1/4 second. It takes 15 seconds to record an ASAP master frame, but only 15/18 second to play it back. Note that on playback the words spew forth at the same rate as real-time data, but due to the difference in recurrence of the end-of-frame signals, there can be no ambiguity between real-time and playback streams.

Addresses of data words to be recorded are loaded into the NDRO memory well before lift-off, and there is evidently no way to change them during the mission, either for correction or modification.

Input Data Format

The enormous data appetite of the PCM/DDAS is fed from an array of analog and digital sources. DC voltage levels are multiplexed and re-multiplexed by Model 103 Remote Analog

Submultiplexers (RASM) and Model 270 Multiplexers into a stream of pulses whose amplitudes are converted to digital form by the PCM section. Digital data is entered via Model 410 Remote Digital Multiplexers or directly to the DDAS.

I have not attempted to determine the details of this data merging process, either in content or quantity. Suffice it to say it takes a lot of measurements to fill an 1800-word master frame every 1/4 second. The computer (ATMDC), as we shall see, accounts for 1/60 of this volume and a discussion of this content will occupy the remainder of this memorandum.

ATMDC Telemetry Output

The ATMDC must load a special 50-bit telemetry output register 24 times each second. Two pulse trains originating in the telemetry system, 24 pulses/sec, and 1 pulse/sec, trigger computer interrupts to tell the computer when each word is needed. The 1 pulse/sec interrupt, being concurrent with one of the others, permits the computer to recognize the beginning of each 24-word cycle. An interrupt occurs every 41.7 milliseconds. The telemetry circuits read the computer register 41.5 ms. after the request is made, so the computer must respond within this time. Normally, interrupt response is virtually instantaneous, but sometimes the computer must put itself into a non-interruptable status to do certain time-critical operations. Obviously, these periods must be shorter than 41.5 ms.

The computer supplies 24 words/sec or 6 words every 1/4 sec, but these are 50 bit words, so lo and behold, we have 30 10-bit words every 1/4 second -- exactly 1 word per frame of the real-time telemetry! Where these are located in the master frame, or whether the 5 segments of a 50-bit word are distributed among 5 consecutive frames or packed together in a single frame, I cannot determine. However, the average data rate is exactly 1 word out of every 60-word telemetry frame originating from the computer. Furthermore, only four out of the 24 computer words are recorded by ASAP; specifically, words 6, 12, 18, and 24. These correspond to the final five 10-bit words in every master frame. Thus, 5 of every 100 words recorded by ASAP originate from the computer.

Although the computer can supply only 24 words each second and only 4 will be tape recorded, no law says that they must be the same words each second. That's what makes this such a fascinating study.

Telemetry lists are classified as Class I, Class II, Memory Dump, Self Test, and Troubleshooting Mode. These are listed in ascending order of preemptive priority, i.e., when it's needed Class II overrides Class I, Memory Dump overrides Class I and II, etc. In the normal course of things, only Class I and Class II will be transmitted; the others are used only in special situations or on command.

Class I Telemetry

There are presently 30 words defined in the Class I telemetry, structured as shown in Figure 4. Bits 45 through 50 are reserved for a unique code identifier which I have written as consecutive octal numbers. However, for reasons best known to the designers, these bits are written in reverse order binary, i.e., octal code 03 is actually written 110 000, etc. This convention is used in all the computer telemetry words. A unique code identifies each word type.

The remaining 44 bits are divided: 16, 16, 12; 11, 11, 11, 11; or a special field, and data is assigned to appropriately sized cells. This complex structure is difficult for the computer to assemble, requiring much shifting and masking (remember that the computer word length is 15 bits plus sign), but it does yield high transmission efficiency.

Class I telemetry is transmitted each second unless it is preempted by some other class. Since there are 30 words and only 24 slots, some alternation is required. Figure 5 shows how this is done. The 24 slots are listed vertically; the word number that each contains is shown horizontally for each consecutive second. The horizontal arrows signify repetition of the established pattern. Most slots contain the word of the same number. However, slots 17 and 19 through 23 are used alternately for words 25 - 30.

Slots 6, 12, 18, and 24 are of special interest because they are the only slots that are recorded by the ASAP tape recorder. Rather than record words 6, 12, 18 and 24 exclusively, all 30 words are rotated through these 4 slots over an 8 second period. (Word 24 is recorded 3 times to fill up all 32 recorded slots.) Although all 30 words get recorded each 8 seconds this way, words 6, 12, and 18 come out on the short end, being omitted altogether from the real-time telemetry, except for their appearance once every 8 seconds in the ASAP slots.

Words 4 and 27 deserve special mention because their contents are multiplexed. In word 4, the TACS engine firing status segment goes through 13 different permutations before repeating. Since a different permutation is recorded every 8 seconds by ASAP, it takes 104 seconds to record a full set of

permutations. In word 27, the segment containing $\int\dot{\phi}_{ij}$ is permuted over 9 different combinations of i and j. Because word 27 alternates with word 20 in the real-time telemetry, but is recorded once every eight seconds, it will take 18 seconds of real-time or 72 seconds of played-back telemetry to recover one sample of each type.

Class II Telemetry

Class II telemetry is transmitted once every 33 seconds, displacing all 24 Class I words with the 24 Class II words shown in Figure 6. I have taken the liberty of adding 100 to the word numbers to avoid any possible confusion between words 1 - 24 in Class I and 101 - 124 in Class II. Their octal code tags are already distinct. Since only 24 words are defined, no alternation is required. However, to ensure that each word will eventually be recorded by ASAP, the words are assigned to output slots on a cyclically permuted basis as shown in Figure 7.

Class II telemetry occurs every thirty-third second while the Class I pattern repeats every 8 seconds. This ensures that a different element of the Class I pattern will be displaced each time.

Other Telemetry

Normal telemetry (Class I and II) can be displaced by a commanded memory dump, a special self-test failure sequence, or troubleshooting mode telemetry. The details can be found in Reference 2.

Times of Validity

The time of validity of each data element is a potentially serious defect in the present telemetry system. Refer back to Figure 5. According to present plans, all the ingredients for the 30 telemetry words will be snatched out of working core simultaneously, during the first interrupt in the first second and kept in buffer storage for outputting in ASAP slots 6, 12, 18, and 24 over the 8 second period. In the first second these same words will be used for outputting in the other non-ASAP slots. In the second and subsequent seconds, a similar simultaneous snapshot will be performed but only for the non-ASAP slots.

This procedure would appear to guarantee that all non-ASAP words have the same time of validity, at the beginning of each second; and all ASAP words also have a common time of

validity at the beginning of the first second. Unfortunately, this isn't quite true.

The computer computation cycle and the telemetry cycle, while both nominally 1 second long, are derived from independent sources. The computation cycle depends on the computer's internal master timing clock, while the telemetry system generates its own timing pulses. Thus, the first telemetry interrupt may occur any old time in the computation. Data gathered from core at such a time will include some words that have just been updated and some that are left-over from last cycle -- in an unknowable mixture. So simply gathering up all the data together does not ensure that it's all from the same computation cycle.

Two solutions to this problem, neither very attractive, come to mind:

1. Synchronization - Let the computation cycle be initiated by the first telemetry interrupt instead of the internal computer clock. Then, when all the telemetry data is gathered up it would necessarily all be from the just concluded previous cycle. The obvious objection to this scheme is that continued computer operation becomes contingent on a working telemetry system, probably resulting in less system reliability. Perhaps failure safeguards could be devised, though. For example: Let the computation cycle begin whenever

   (a) A telemetry interrupt occurs, or

   (b) 1.1 sec has elapsed since the last start (as determined from the computer internal clock).

   Then, if the telemetry interrupts cease the computer will continue to run, albeit at a somewhat slower pace. Undoubtedly, some equation redesign would be needed to permit successful operation at either rate.

2. Double Buffering - Provide another buffer big enough for all the telemetry data, and let the computer program load it at the end of each cycle. The telemetry interrupt would then collect its needed data from there, rather than from working core, and load the currently provided buffers. The difficulty here is the considerable block of core needed for the extra buffer.

If neither of these options nor any equivalent solutions prove to be feasible, it would seem worthwhile to reconsider the utility of the buffering scheme presently planned.

In Class II telemetry, data for each word is fetched from core during the same interrupt that it is loaded out. No buffering at all is used, so whatever is available at the interrupt time is what's transmitted. Since all the Class II data is constant or very slowly changing, the time of validity is not critical.

1025-DAD-1i

D. A. De Graaf

Attachments
Figures 1 - 7

REFERENCES

1. Preliminary Apollo Telescope Mount Telemetry System Description GC 110416, December 26, 1967, MSFC

2. ATMDC Interface Program Requirements Document (IPRD), SVWS Version, Section 18 Telemetry Requirements, Rev. A, 5/11/70, MSFC.

REVISIONS			
SYM	DESCRIPTION	DATE	APPROVAL

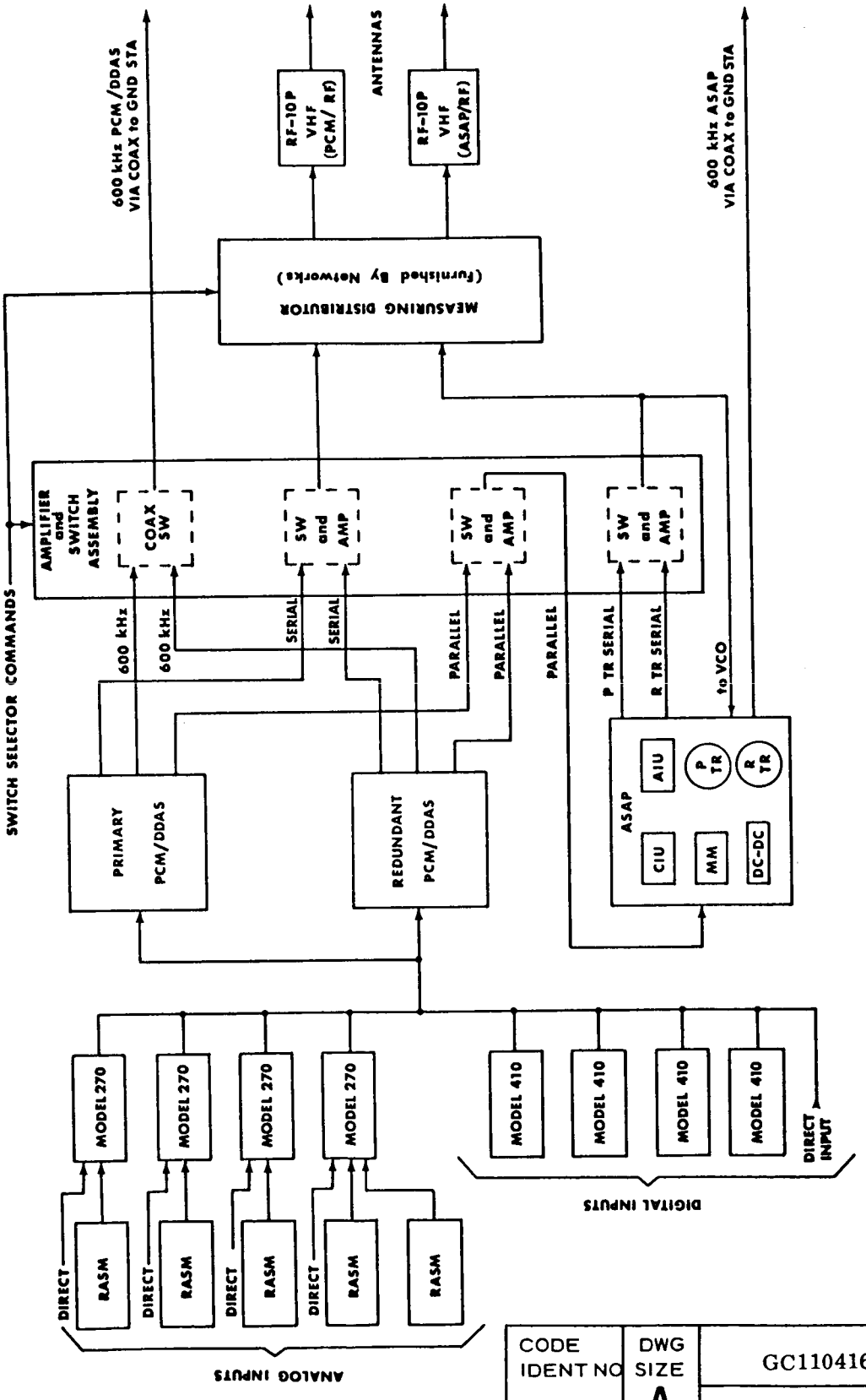

Figure 1. ATM Telemetry System Block Diagram

CODE IDENT NO	DWG SIZE	GC110416
	A	SHEET 6 of 30

REVISIONS			
SYM	DESCRIPTION	DATE	APPROVAL

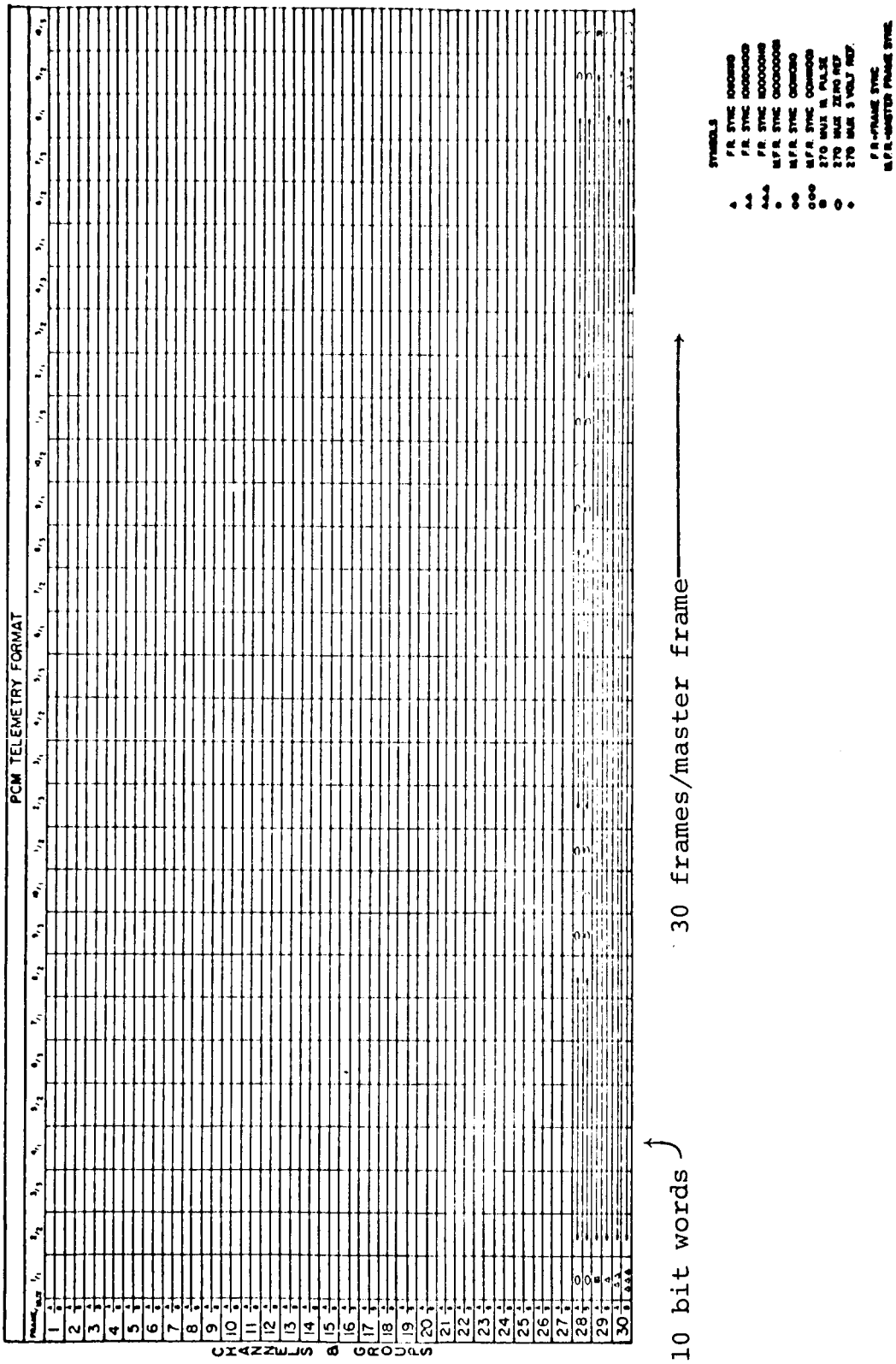

Figure 2. PCM/DDAS Format

CODE IDENT NO	DWG SIZE	GC110416
	A	SHEET 12 of 30

REVISIONS			
SYM	DESCRIPTION	DATE	APPROVAL

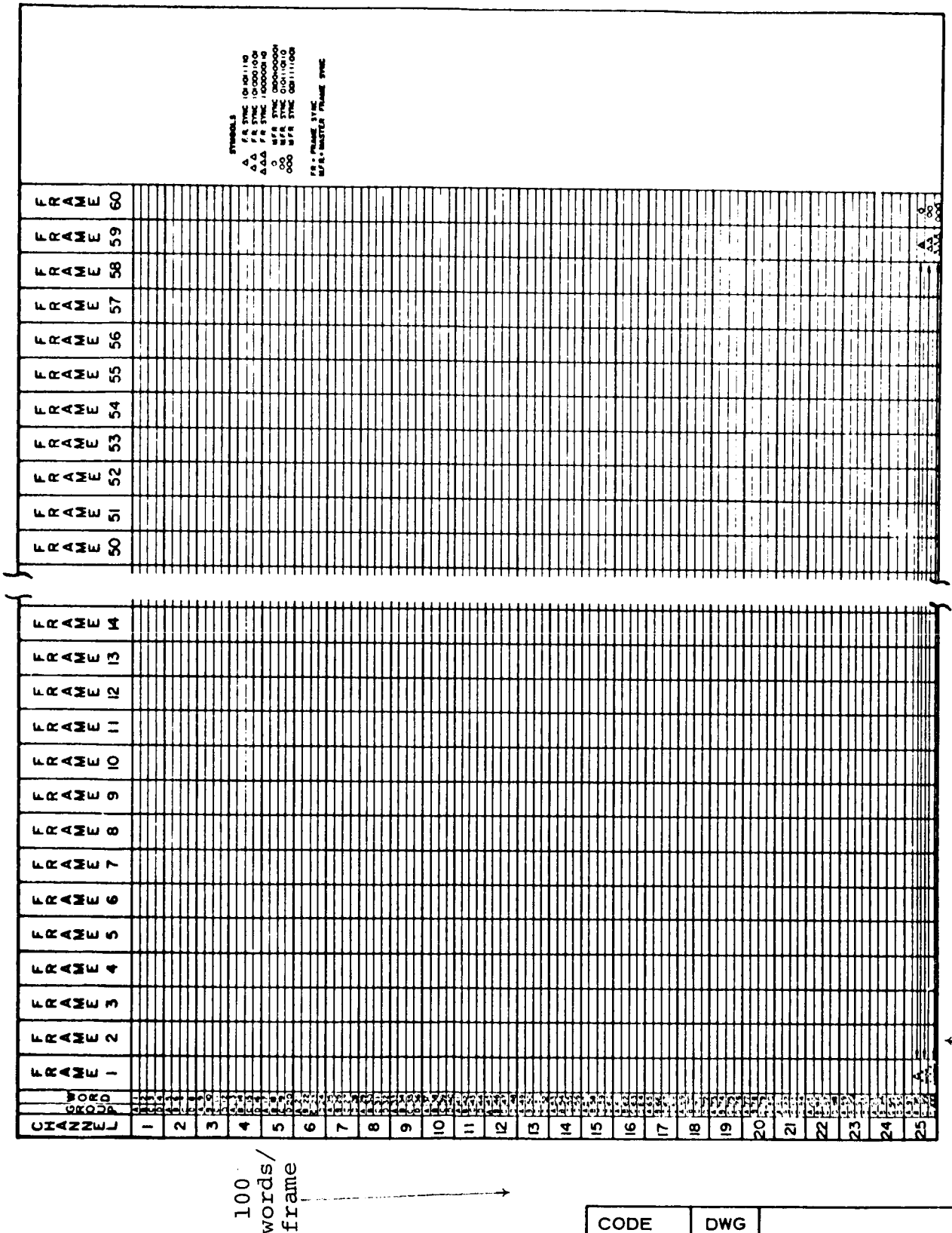

Figure 3. ASAP Format

CODE IDENT NO	DWG SIZE	GC110416
	A	SHEET 15 of 30

CLASS I TELEMETRY WORDS

Word No.	DATA (Bit Positions 1–16)	DATA (Bit Positions 17–32)	DATA (Bit Positions 33–44)	OCTAL CODE*
1	Status Word 1	Status Word 2	1st Cmd.	01
2	Status Word 3	Status Word 4	2nd Cmd.	02
3	Status Word 5	-----	3rd Cmd.	03
4	TACS Engine Firing Status	-----	4th Cmd.	04
5	-----	-----	DOR 7 Status | x	05
6	ψ_1 | x	ψ_3 | x	-----	06
7	$\dot{\phi}_{1x}$	$\dot{\phi}_{2x}$	$\dot{\phi}_{3x}$	$\dot{\phi}_{1y}$	07
8	$\dot{\phi}_{2y}$	$\dot{\phi}_{3y}$	$\dot{\phi}_{1z}$	$\dot{\phi}_{2z}$	10
9	$\dot{\phi}_{3z}$	γ_{E1x}	γ_{E2x}	γ_{E1y}	11
10	γ_{E2y}	e_{11}	e_{12}	e_{13}	12
11	e_{21}	e_{22}	e_{23}	e_{31}	13
12	β_x	β_y	β_z	NRL Offset | xxxx	14
13	e_{32}	e_{33}	$\dot{\delta}_{1(1)}$	$\dot{\delta}_{3(1)}$	15
14	$\dot{\delta}_{1(2)}$	$\delta_{3(2)}$	$\dot{\delta}_{1(3)}$	$\dot{\delta}_{3(3)}$	16
15	P_{11}	P_{12}	4.8 Khz Ref | x	17
16	P_{13}	P_{14}	-----	20
17	DIR 1 Status	DIR 2 Status | x	Interrupt Status | x	21
18	Orbit Phase Time Remaining	t_{GMT}		22
19	DIR 3 Status	DIR 4 Status	DIR 5 Status | xxxx	23
20	DIR 6 Status	DIR 7 Status	ϵ_x	24
21	DOR 1 Status	DOR 2 Status	ϵ_y	25
22	DOR 3 Status	DOR 4 Status	ϵ_z	26
23	DOR 5 Status	DOR 6 Status	-----	27
24	γ_{RR}	γ_x | EEEV	γ_y	30
25	t	t_a	-----	31
26	$\dot{\theta}_{xc}$	$\dot{\theta}_{yc}$	-----	32
27	$\dot{\theta}_{zc}$	$\int \ddot{\theta}_{ij}$	-----	33
28	Memory Cell	Memory Cell	-----	34
29	-----	-----	-----	35
30	-----	-----	-----	36

*Bits are written in reverse binary.

FIGURE 4

CLASS I TELEMETRY SEQUENCE

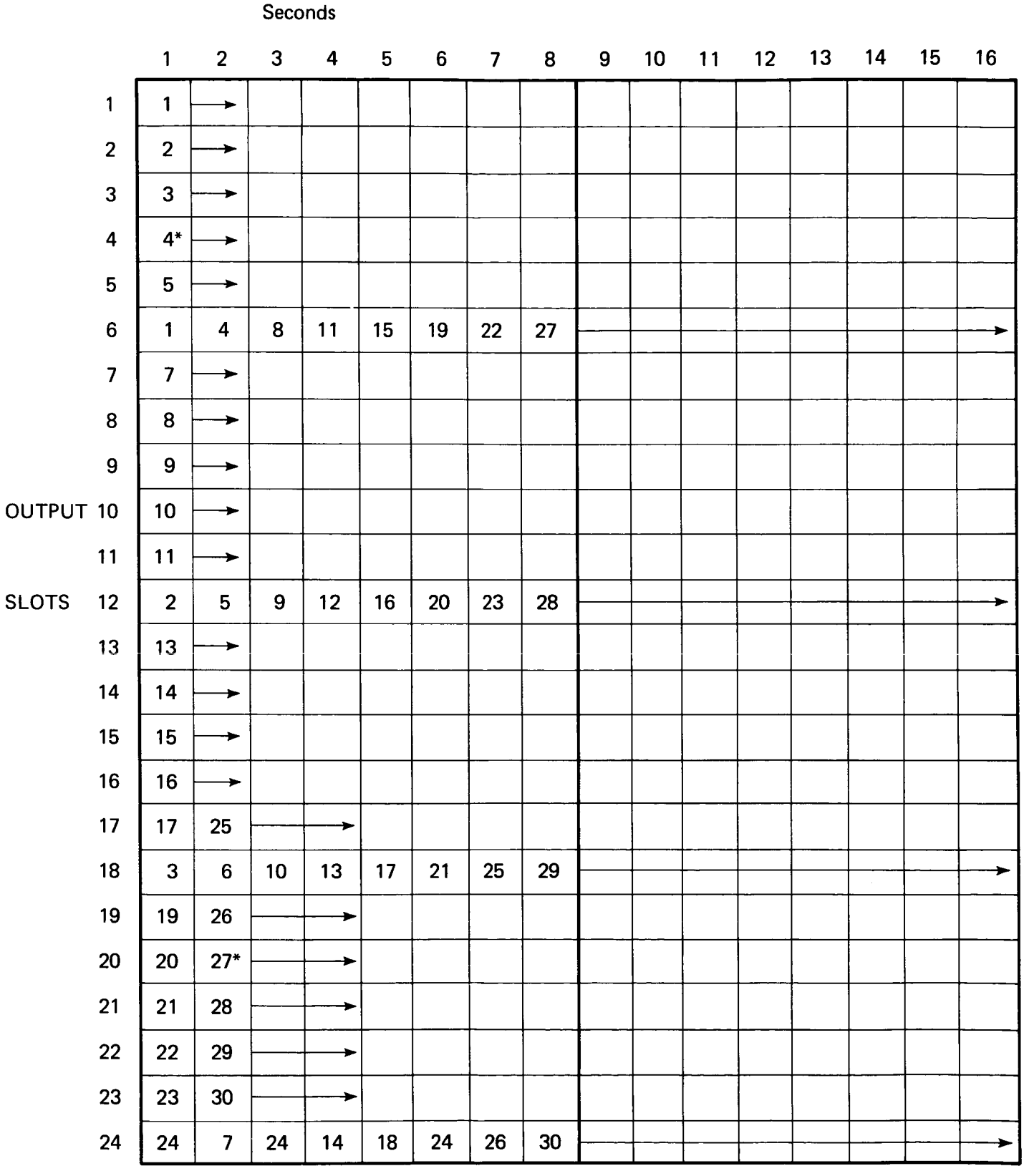

*Multiplexed; see text

FIGURE 5

CLASS II TELEMETRY WORDS

DATA

OCTAL CODE*

Bit Positions

Word No.	16	32	44	50
101	q_{I1}	q_{I2}	1st Cmd.	41
102	q_{I3}	q_{I4}	2nd Cmd.	42
103	λ_z	ρ	3rd Cmd.	43
104	ρ_s	η_y	4th Cmd.	44
105	λ_y	$\sin n_x$	ZLV Maneuver T. xxxx	45
106	ρ_{dm}	ν_z	η_{TM}	46
107	t_{MID}	t_{AN}		47
108	T_A	t_M		50
109	R_e/R_v	Δt_B		51
110	M	ATMDC Temp. / WCIU Temp.	ψ_D	52
111	Ω_o	-----	-----	53
112	-----	-----	-----	54
113	-----	-----	-----	55
114	t_{21} / t_{22}	t_{23}	t_{32}	56
115	ϵ_{y1} / ϵ_{y2}	ϵ_{z1} / ϵ_{z2}	t_{33} x	57
116	H_{x1} / H_{y1}	H_{z1} / H_{x2}	H_{y2} / H_{z2} xx	60
117	H_{z3} / H_{y3}	H_{z3} / H_{x4}	H_{y4} / H_{z4} xx	61
118	----------			62
119	------		ρ'	63
120	τ'_o	t'_M		64
121	t_{GMT} for NRL bias	γ_{xB1} xxxx	γ_{yB1}	65
122	t_{GMT} for HCO bias	γ_{xB2} xxxx	γ_{yB2}	66
123	t_{GMT} for Hα-1 bias	γ_{xB3} xxxx	γ_{yB3}	67
124	t_{GMT} for Hα-2 bias	γ_{xB4} xxxx	γ_{yB4}	70

*Bits are written in reverse binary.

FIGURE 6

CLASS II TELEMETRY SEQUENCE

OUTPUT SLOTS	Seconds 33	66	99	132	165	198	231
1	101	102	103	104	105	106	107
2	102	103	104	105	106	107	ETC. →
3	103	104	105	106	107	108	
4	104	105	106	107	108	109	
5	105	106	107	108	109	110	
6	106	107	108	109	110	111	
7	107	108	109	110	111	112	
8	108	109	110	111	112	113	
9	109	110	111	112	113	114	
10	110	111	112	113	114	115	
11	111	112	113	114	115	116	
12	112	113	114	115	116	117	
13	113	114	115	116	117	118	
14	114	115	116	117	118	119	
15	115	116	117	118	119	120	
16	116	117	118	119	120	121	
17	117	118	119	120	121	122	
18	118	119	120	121	122	123	
19	119	120	121	122	123	124	
20	120	121	122	123	124	101	
21	121	122	123	124	101	102	
22	122	123	124	101	102	103	
23	123	124	101	102	103	104	
24	124	101	102	103	104	105	

FIGURE 7